ARM -- SL032

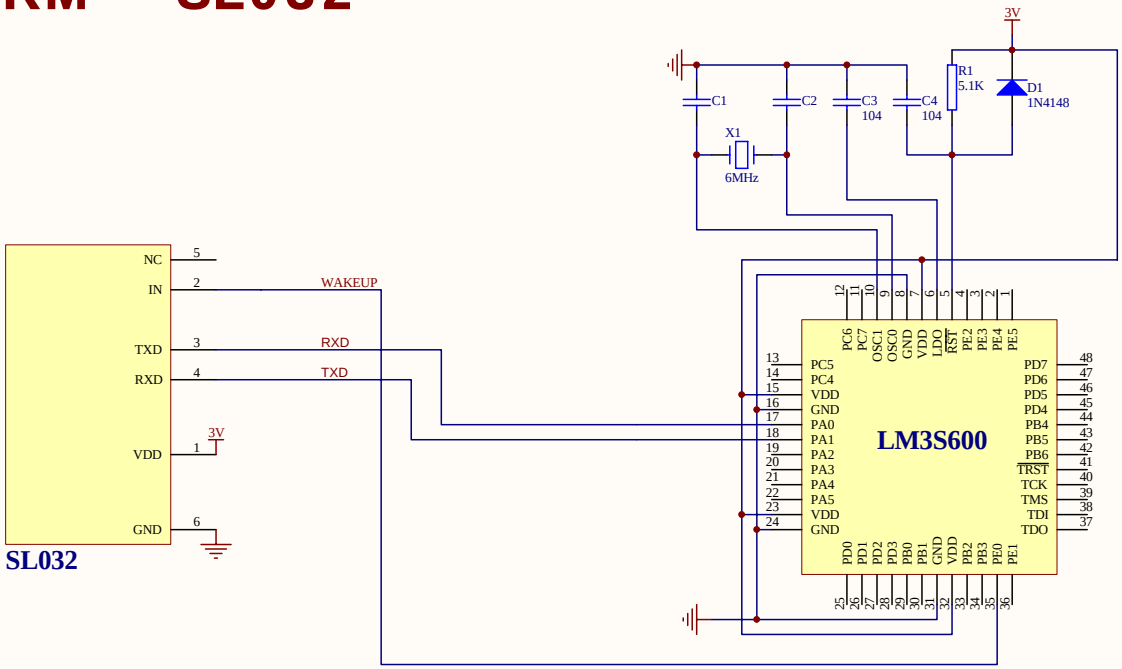
3V
C1
C2
C3
104
C4
104
R1
5.1K
D1
1N4148
X1
6MHz
NC
IN
TXD
RXD
VDD
GND
WAKEUP
RXD
TXD
3V
SL032
LM3S600
PC5
PC4
VDD
GND
PA0
PA1
PA2
PA3
PA4
PA5
VDD
GND
PC6
PC7
OSC1
OSC0
GND
VDD
LDO
RST
PE2
PE3
PE4
PE5
PD7
PD6
PD5
PD4
PB4
PB5
PB6
TRST
TCK
TMS
TDI
TDO
PD0
PD1
PD2
PD3
PB0
PB1
GND
VDD
PB2
PB3
PE0
PE1